AA560V2.1: CHAIN ONLY WIRING FOR AA560 SYSTEM

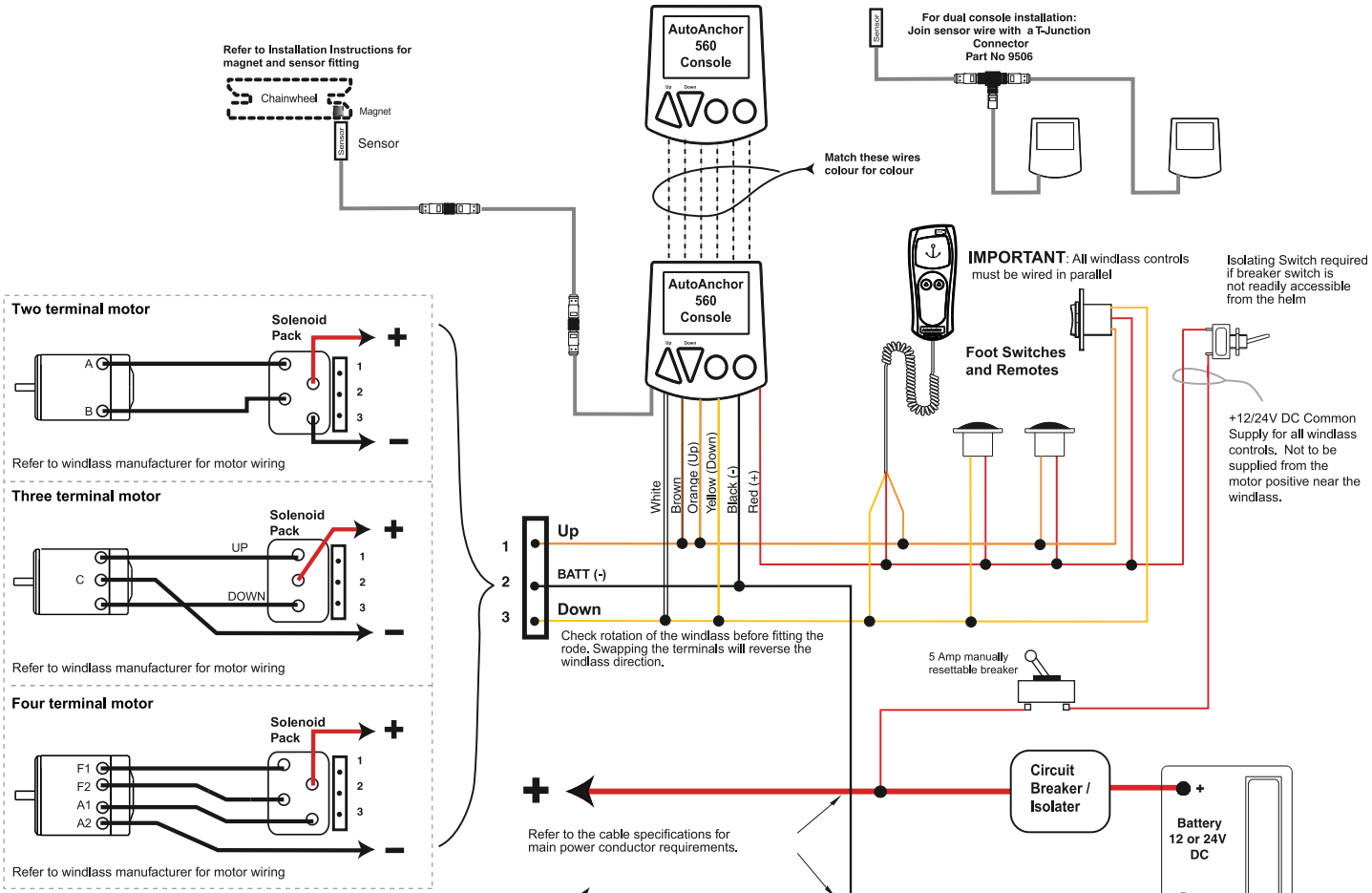

WARNING: Power must be disconnected during installation and when making any changes to wiring after installation

INSTALLATIONS MUST BE CARRIED OUT IN ACCORDANCE WITH USCG, ABYC, NMMA and BMEA REQUIREMENTS